Name _____ **Section (circle one): 0910 1010**

ME 212
Quiz 3
Summer 2009

Solve the problems below on this paper in the spaces provided. In your solutions you need to show not only the answers but the steps or rationale you used to arrive at the answer. If you perform special actions on your calculator (like a SOLVE or a cross product), write out the steps you used and precisely what you entered into the calculator. Your answers need to be complete enough to make your work *checkable.* Box your final answers. If you need more space, you may attach a paper with the continued part of the problem clearly designated as the continued part.

1. A frictionless pendulum is composed of two sticks of length $\boldsymbol{\ell}$ and mass **m** attached rigidly together as shown in the drawing at right.

   Formulae:

$$\bar{I} = \frac{1}{12} m l^2$$

$$\vec{v} = \vec{\omega} \times \vec{r}, \quad v = \omega r, \quad \omega = \frac{v^2}{r}$$

$$\vec{a}_t = \vec{\alpha} \times \vec{r}$$

$$\vec{a}_n = \vec{\omega} \times (\vec{\omega} \times \vec{r}) = \vec{\omega} \times \vec{v}$$

$$\vec{a}_A = \vec{a}_B + \vec{a}_{A/Bt} + \vec{a}_{A/Bn}$$

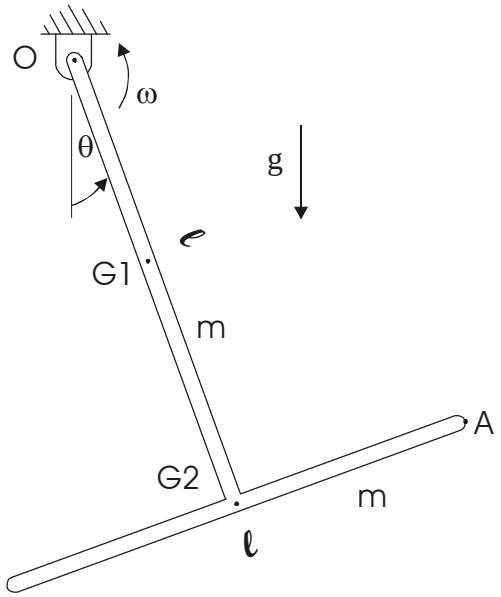

a. In the space below, draw the pendulum's free-body diagram and mass-acceleration diagram.

FBD:	MAD:

b. In the space below write the correct equilibrium equation and then solve it for α. In your final answer there should be no variables other than those shown in the drawing above.

c. What is the acceleration of point A in terms of only the variables shown in the drawing?

d. Calculate the components of the force at O in terms of the variables shown in the drawing. These can be any two components (x-y, n-t, r-θ, etc.) of your choosing.

e. Calculate the moment at point O.

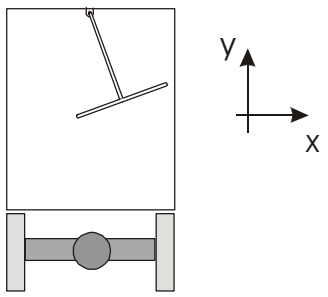

Rear view of truck with pendulum installed transversely.

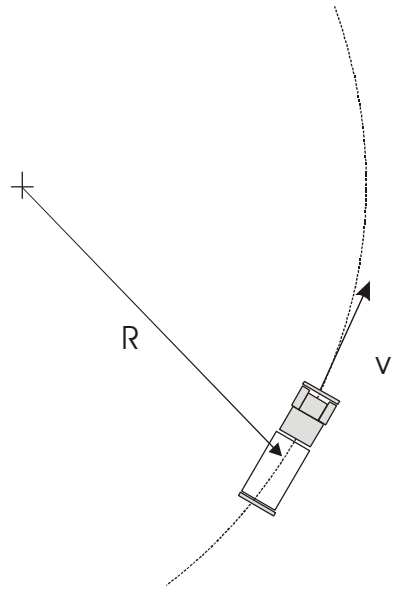

Bird's eye view of truck on circular path at constant speed.

The pendulum is now installed in a truck so that it can swing transversely, that is from side to side, as shown above. The truck then drives at a constant speed **v** around a curve that is a circular path with radius **R**.

f. Redraw the FBD and MAD for this case, with the pendulum swinging as before.

FBD:	MAD:

g. Draw a vector diagram of the component vectors and the total acceleration vector of point G2. Include in your diagram the angle θ to show directions of the component vectors.
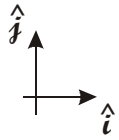
h. Calculate this acceleration, $\mathbf{a}_{G2}$, in terms of the variables shown on the drawings given, in x-y coordinates.